Nematron

Pioneering Innovative Computer & Visualization Solutions

SB600

6-Slot High Performance Industrial PC without Display

The Nematron SB600 is a high performance Core 2 Duo Industrial Computer without integrated display. Its' compact profile and high performance make this unit ideal for many space limited applications.

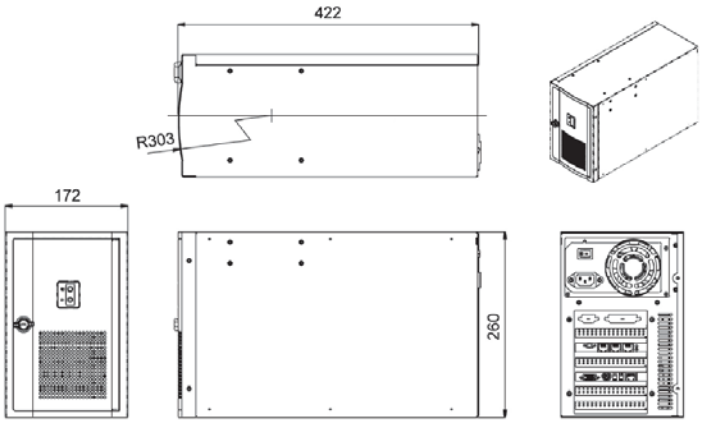

Horizontal or Vertical Mounting Options

Standard Features:

- Intel Core 2 Duo E8400
  - 3.0 GHz, 1333 MHz bus, 6 MB CACHE
- Compact size with stylish lockable front door
- Mounting brackets for Horizontal or Vertical mounting to a shelf or panel
- DRAM up to 4 GB
- Up to two internal 250 GB SATA hard drives
  - Optional 40 GB Solid State SATA hard drives
- Extensive Connectivity
  - Dual 10/100/1000 Ethernet ports
  - 4 USB 2.0 ports (2 on rear, 2 behind front door
  - 2 RS-232 serial ports (one selectable 485/422/232)
  - Parallel port
  - PS/2 port (KB/Mouse slitter cable included)
- Available Expansion
  - Two PCI
  or
  - One PCI and one ISA (full-length)
- Additional Connectivity (ships with unit but utilizes open expansion slots)
  - Audio (in/out)
  - DVI monitor connection
  - 2 USB 2.0 ports
- DVD-R/W drive (behind lockable front door)
- 400 Watt Power Supply
- UL, cUL, CE, & RoHS (pending)
- Windows XP Professional (Windows 7 & Vista Business optional)

NEMATRON CORPORATION · 5840 Interface Drive, Ann Arbor, MI 48103 · 1.800.NEMATRON (636-2876)

Specifications:

AC Input	100-240 VAC, 47-63 Hz, 8.0A Max
Input Power	400 W
Operating Temperature	0ºC to 50ºC
Operating Humidity	20% to 80% RH, noncondensing
Operating Shock	15g peak acceleration 11 msecond
Operating Vibration	0.006” peak to peak, 1g max 5-2000 Hz
Operating Altitude	Sea level to 10,000 feet

Warranty	2 years
Ships With	Power Cord, Mounting Hardware KB/Mouse Splitter Cable, Mounting Brackets, Drivers, & Manual. Also ships with customer installable Audio, USB and DVI connections (displaces open available expansion slots)
Options	DRAM, Solid State Hard Drives, Operating System

Order Number Generation:

SB600 – E8400 ___ ___ ____- DVD ___

Processor Option

-E8400	**Intel Core 2 Duo E8400 (3 GHZ, 1333 MHz bus, 6 MB CACHE)**

DRAM Option

-1GB	**1 GB DRAM**
-2GB	**2 GB DRAM**
-4GB	**4 GB DRAM**

First Internal Hard Drive

-HD	**250 GB (minimum) SATA hard drive**
-40SS	**40 GB Solid State SATA hard drive**

Second Internal Hard Drive [1]

blank	**None installed**
-HD	**250 GB (minimum) SATA hard drive**
-40SS	**40 GB Solid State SATA hard drive**

Removable Media

-DVD	**DVD-R/W SATA Drive installed**

Operating System

-XP	**Windows XP Professional (must choose a Hard Drive option)**
-W7	**Windows 7 (must choose a Hard Drive option)**
-VS	**Windows Vista Business (must choose a Hard Drive option)**
-NOS	**No OS installed**

1 **Second Internal hard drive cannot be installed if First Internal Hard Drive is not installed**

Contact Information

US and Canadian Office - Nematron Corporation
5840 Interface Drive
Ann Arbor, MI 48103 USA
Tel: 1.734.214.2000
Fax: 1.734.994.8074
Email: info@nematron.com

International Office - Nematron Europe Ltd
17A Somerset House, Hussar Court
Waterlooville, Hampshire PO7 7SG UK
Tel: +44 (0)23 9226 8080
Fax: +44 (0) 23 9226 8081
Email: sales@nematron.net

For more information or to request a quote, visit us online at www.nematron.com